20.2.3 Exercises - Lorentz Force on a moving charge 3

1.

a. State the type of field, or fields, that may cause a force to be exerted on a particle that is

i. uncharged and moving,

.....[1]

ii. charged and stationary,

.....[1]

iii. charged and moving at right-angles to the field.

.....[2]

b. A particle X has mass 3.32×10^{-26} kg and charge $+1.60\times10^{-19}$ C.

The particle is travelling in a vacuum with speed 7.60×10^{4} m s^{-1}. It enters a region of uniform magnetic field that is normal to the direction of travel of the particle. The particle travels in a semicircle of diameter 12.2 cm, as shown in Fig.

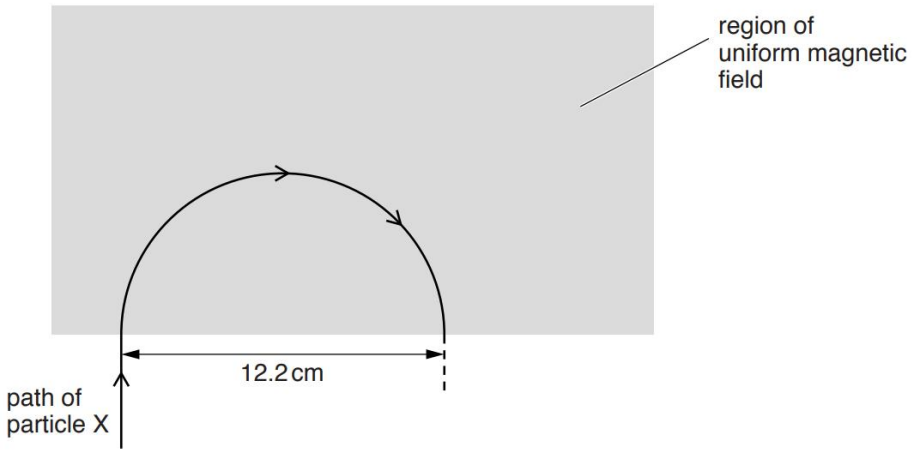

For the uniform magnetic field,

i. state its direction,

.....[1]

ii. calculate the magnetic flux density.

magnetic flux density = ... T [3]

c. A second particle Y has mass less than that of particle X in (b) and the same charge.

It enters the region of uniform magnetic field in (b) with the same speed and along the same initial path as particle X.

On Fig., draw the path of particle Y in the region of the magnetic field. [1]

2. A charged particle of mass m and charge –q is travelling through a vacuum at constant speed v. It enters a uniform magnetic field of flux density B. The initial angle between the direction of motion of the particle and the direction of the magnetic field is 90°.

a. Explain why the path of the particle in the magnetic field is the arc of a circle.

.....

.....

..... [3]

b. The radius of the arc in (a) is r.

Show that the ratio $\frac{q}{m}$ for the particle given by the expression: $\frac{v}{Br}$ [1]

c. The initial speed v of the particle is 2.0 × 107 m s–1. The magnetic flux density B is 2.5×10^{-3}T. The radius r of the arc in the magnetic field is 4.5 cm.

i. Use these data to calculate the ratio $\frac{q}{m}$.

ratio = ... C kg^{-1} [2]

ii. The path of the negatively-charged particle before it enters the magnetic field is shown in Fig.

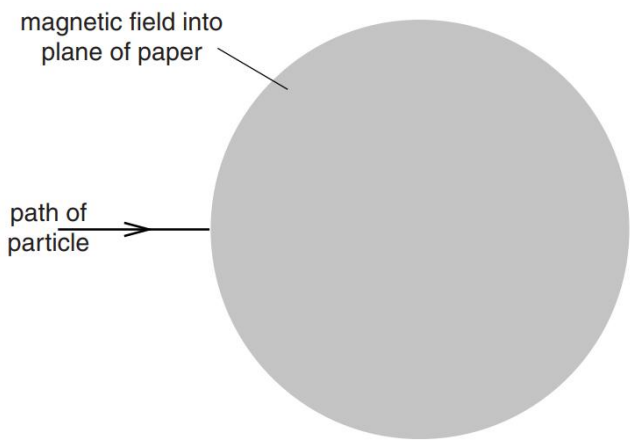

The direction of the magnetic field is into the plane of the paper.

On Fig., sketch the path of the particle in the magnetic field and as it emerges from the field. [2]

3.

a. Particles having mass m and charge $+1.6 \times 10^{-19}$ C pass through a velocity selector. They then enter a region of uniform magnetic field of magnetic flux density 94 mT with speed 3.4×10^{4} ms^{-1}, as shown in Fig.

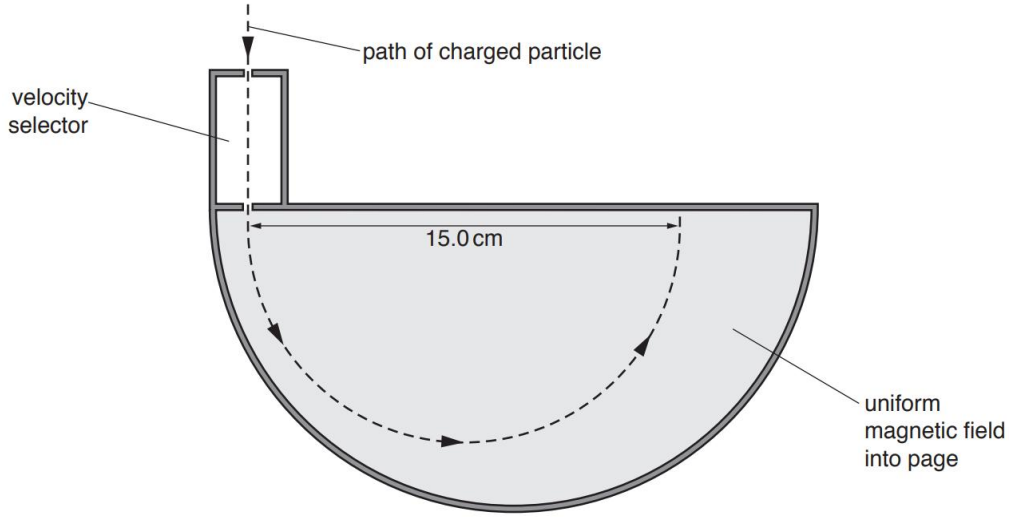

The direction of the uniform magnetic field is into the page and normal to the direction in which the particles are moving. The particles are moving in a vacuum in a circular arc of diameter 15.0 cm. Show that the mass of one of the particles is 20u. [4]

b. On Fig., sketch the path in the uniform magnetic field of a particle of mass 22u having the same charge and speed as the particle in (b). [2]

4.

a. Explain the use of a uniform electric field and a uniform magnetic field for the selection of the velocity of a charged particle. You may draw a diagram if you wish.

.....

.....

..... [3]

b. Ions, all of the same isotope, are travelling in a vacuum with a speed of 9.6×10^4 m s^{-1}. The ions are incident normally on a uniform magnetic field of flux density 640 mT. The ions follow semicircular paths A and B before reaching a detector, as shown in Fig.

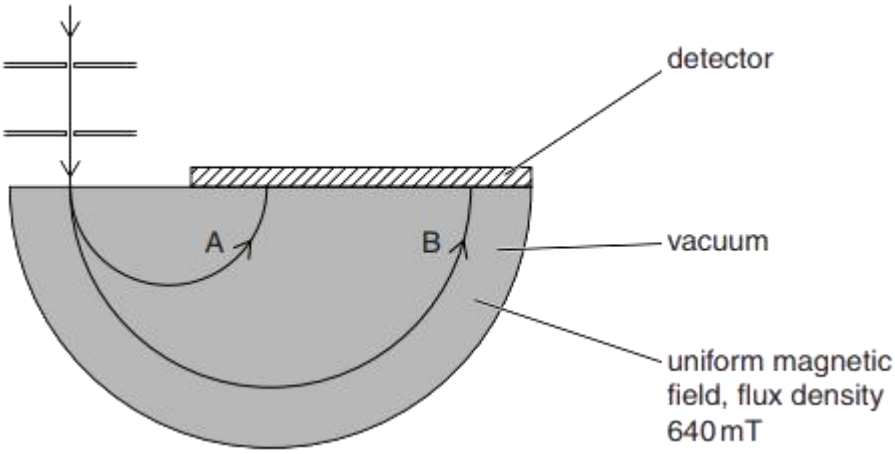

Data for the diameters of the paths are shown in table.

path	diameter/cm
A	6.2
B	12.4

The ions in path B each have charge $+1.6\times10^{-19}$ C.

Determine the mass, in u, of the ions in path B.

mass = ... u [4]

c. Suggest and explain quantitatively a reason for the difference in radii of the paths A and B of the ions.

.....

.....

..... [3]